FIGURE 8

NORTHERN FLICKER NEST BOX

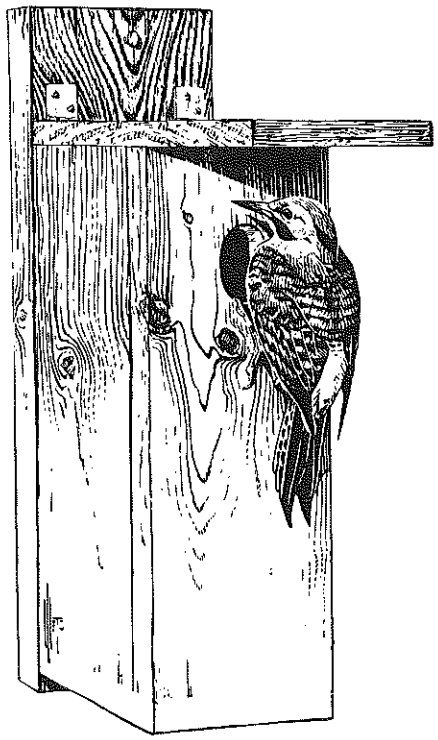

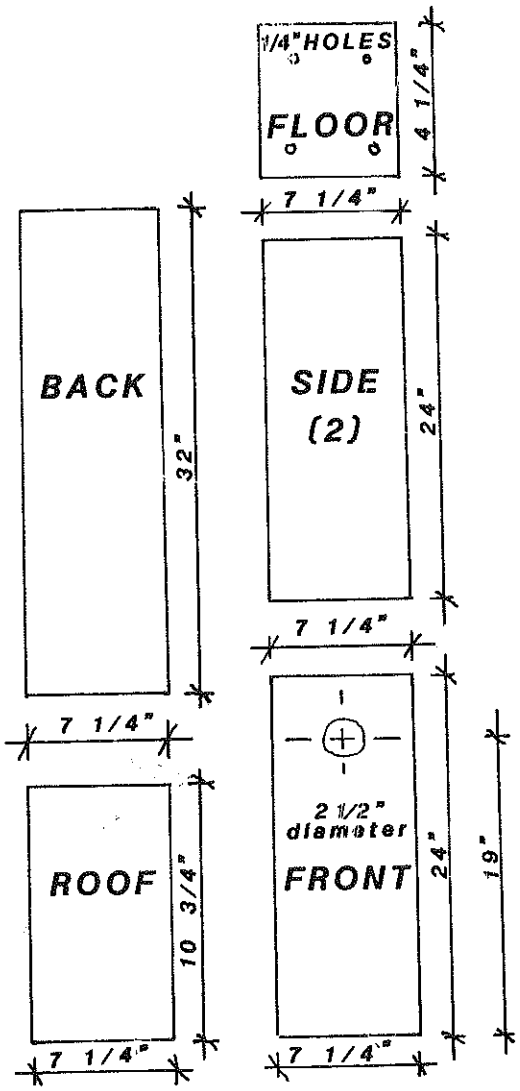

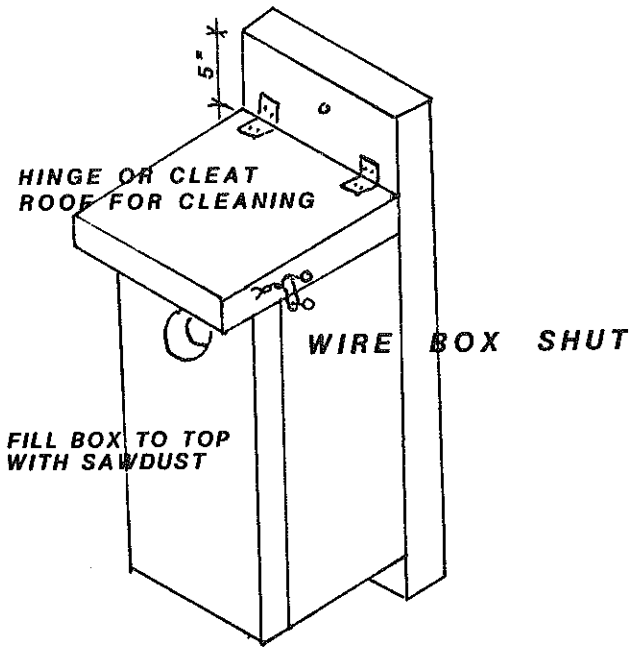
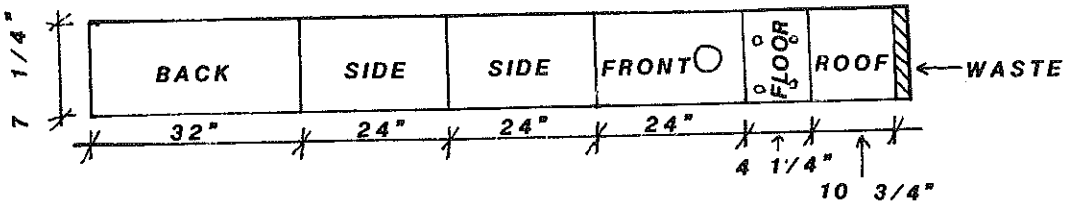
LUMBER: ONE 2"x8"x 12'0"